No. COMPONENTS IN ASSLY	OP1	OP2	OP3	OP4	OP5	OP6
1						

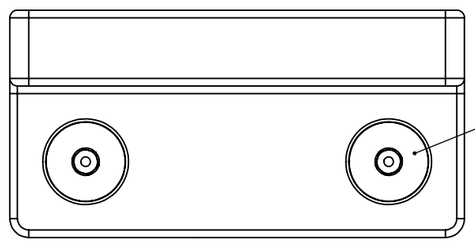

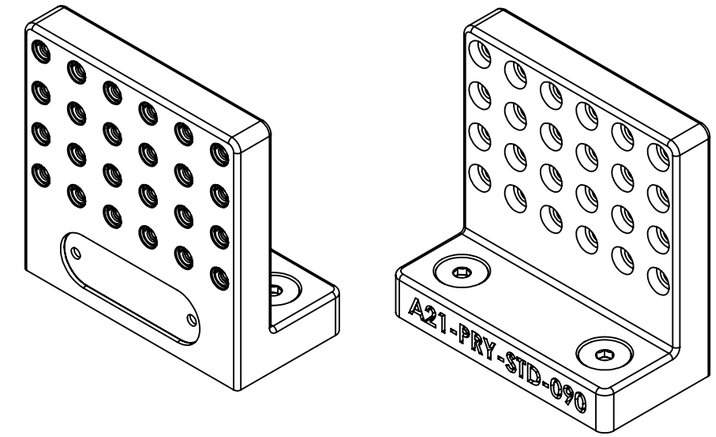

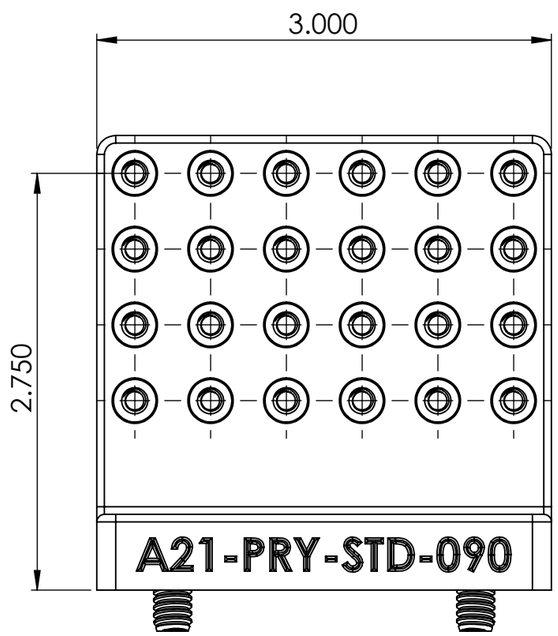

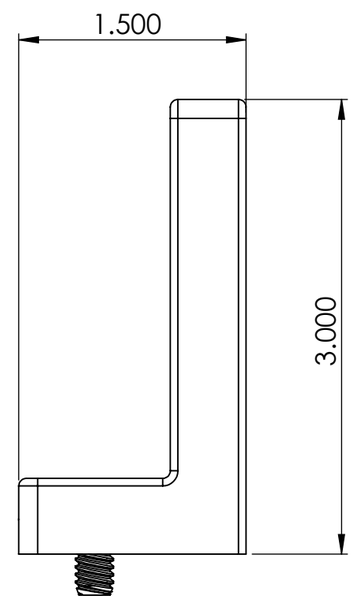

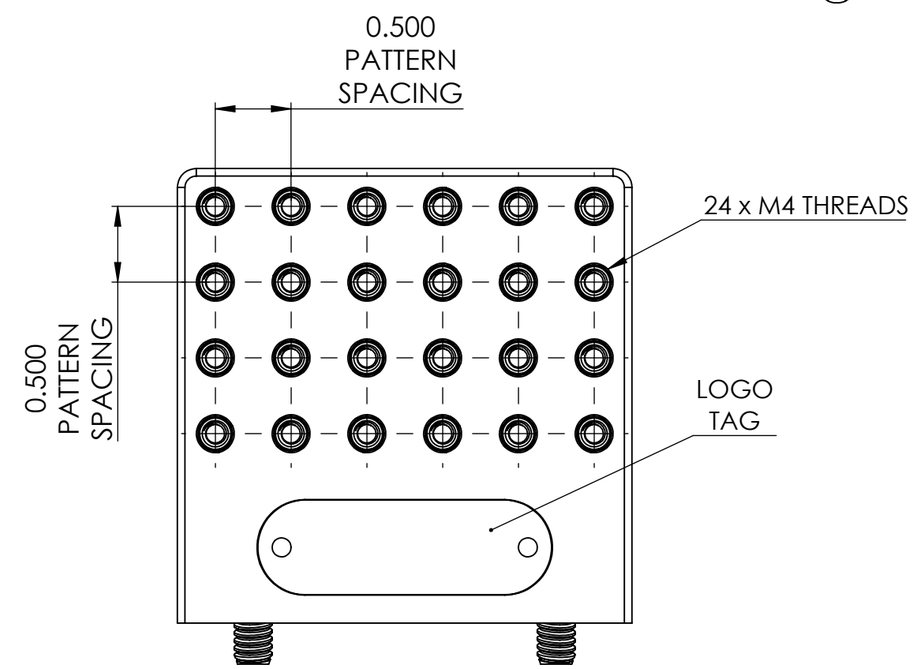

PrymeFix
fixturing solutions
155 PRAIRIE LAKE RD, SUITE A
EAST DUNDEE, IL 60118
847.428.7122

3D PRINTER PROPERTIES			
Material 1:	☐ Support	Material 2:	☐ Support
Core 1:		Core 2:	

FILE NAME
A21-PRY-STD-090

DIRECTORY
P:\Manufacturing\PrymeFix Product Line\A11 Angle Mounts\

PROPRIETARY AND CONFIDENTIAL

THE INFORMATION CONTAINED IN THIS DRAWING IS THE SOLE PROPERTY OF PRYMETECH. ANY REPRODUCTION IN PART OR AS A WHOLE WITHOUT THE WRITTEN PERMISSION OF PRYMETECH IS PROHIBITED.

REVISION HISTORY	
1	
2	
3	
4	
5	
6	
7	

UNLESS OTHERWISE SPECIFIED

FRACTIONAL ± .003
ANGULAR: ± 1.0
TWO PLACE DECIMAL ± .010
THREE PLACE DECIMAL ± .003
FOUR PLACE DECIMAL ± .0005 (REAM)

HEAT TREAT **N/A**
MATERIAL **Material <not specified>**
FINISH **N/A**

No Pcs to Complete Order:

MACHINING PROPERTIES | INCH UNITS

DRAWN BY: **AK**
DATE **9/10/2025**

TITLE:
M4 A21-STYLE 90 DEG MOUNT ASSEMBLY

SIZE **B**
DWG. NO. AXX-PRY-STD-XXX PRINTS
REV 0

SCALE: 1:1 | WEIGHT: | SHEET 3 OF 3